Reg. No. | | | | | | | | | | |

[114EC34]

THIRD SEMESTER B.TECH EXAMINATION DECEMBER – 2015

NETWORK ANALYSIS

Time:3 Hours **Maximum Marks:70**

Instructions: Answer any **FIVE** full Questions. Selecting at least TWO from each Part.

PART - A

1. a. Determine the Voltage 'V' using source transformation in method the circuit in figure(1a). **08**

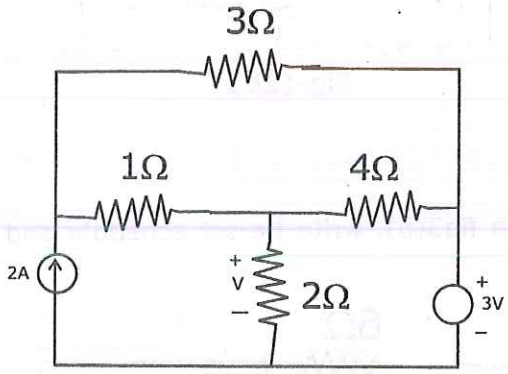

Fig-(1a)

b. Using star-delta transformation, find the resistance across the terminal A and B for the network shown in figure(1b). **06**

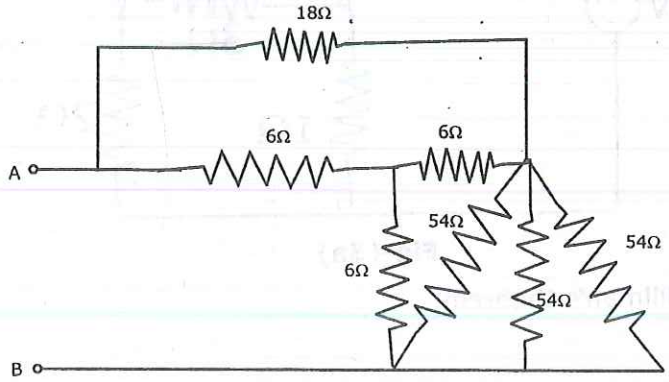

Fig-(1b)

2. a. Find the potential between A and B using node analysis for the circuit shown, in Fig(2a). **07**

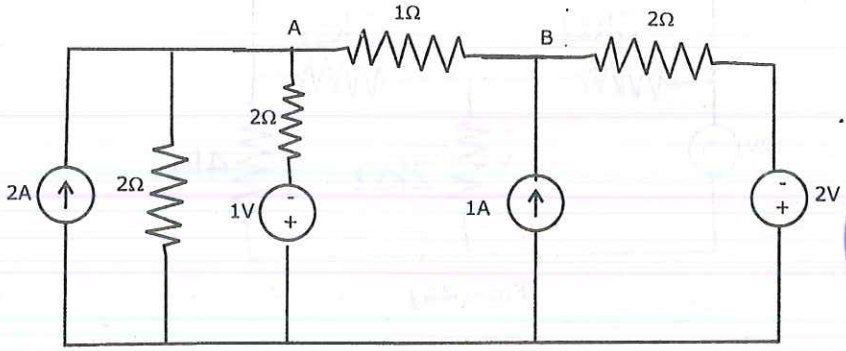

Fig-2a

SCHOOL OF ENGINEERING & TECHNOLOGY
LIBRARY
DATE
JAIN UNIVERSITY-BANGALORE

b. Use mesh analysis to determine the value of V_2 in the network of fig(2b)of so that voltage across 20Ω is zero. **07**

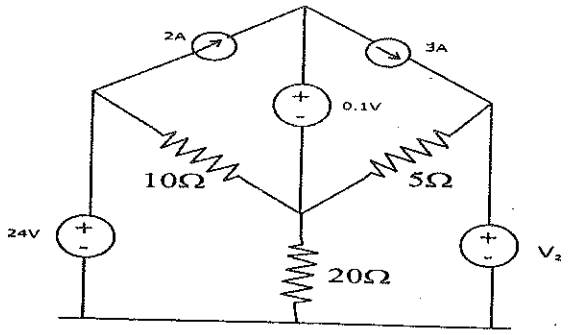

Fig-(2b)

3. a. For the network shown in fig3(b), write tie-set schedule and find values of loop currents. **08**

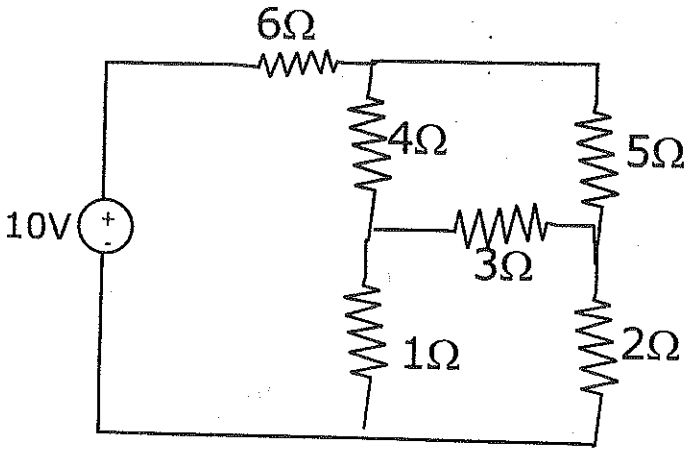

Fig-(3a)

b. State and explain Millman's theorem. **06**

4. a. Find the current I_O for the circuit shown in fig (4a) using Norton's theorem. **07**

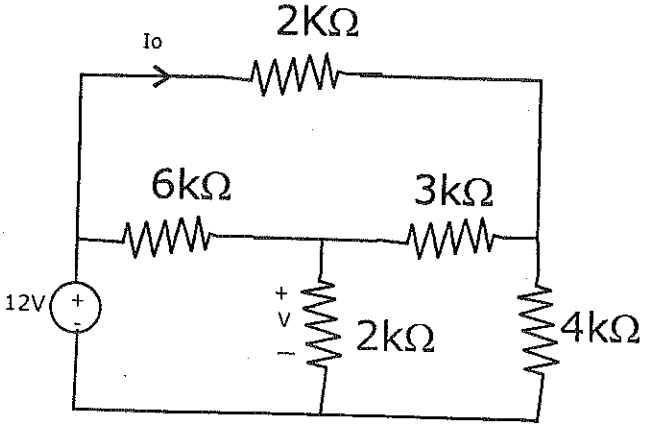

Fig-(4a)

b. Find the maximum power transferred to R_L in the circuit of fig (4b). **07**

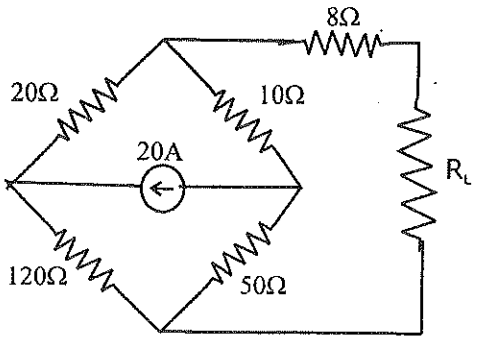

Fig-(4b)

PART - B

5. a. An RLC series circuit has R=1kΩ, C=10pF & L=100mH. If a voltage of 100V is applied across the series combination, determine resonant frequency, quality factor and half power frequencies. **07**

b. Show that resonant frequency is the geometric mean of half power frequencies. **07**

6. a. Express y-parameters in terms of h-parameters. **07**

b. Find Z-parameters for the network shown in fig (6b). **07**

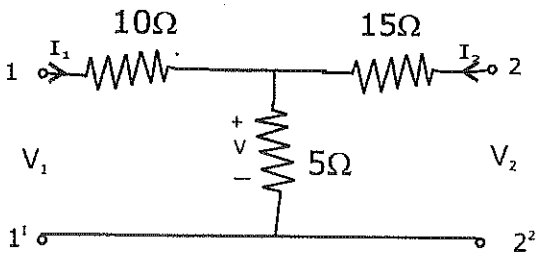

Fig(6b)

7. a. Find the convolution of h(t)=t and f(t)=$e^{-\alpha t}$ for t>0 using Laplace transformation. **06**

b. Find Laplace transformation of the repetitive waveform shown in fig (7b). **08**

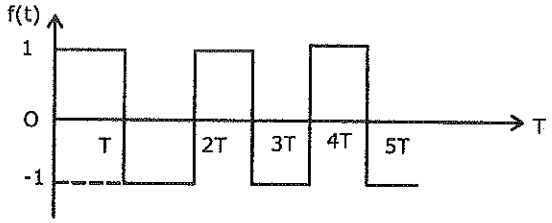

Fig(7b)

8. a. In the circuit shown in figure 8(a), switch K is changed from 1 to 2 at t=0. Steady state conditions having been attained in position 1. Find the values of i, $\frac{di}{dt}$ and $\frac{d^2i}{dt^2}$ at t=(0+). **10**

b. Explain transient behavior of electrical elements. **04**